OPERATING INSTRUCTIONS

SERIES 800 AND 900 SPIN-SPIN TOOLS

MODELS 901, 902 & 903 IN-LINE TOOLS

MODELS 911, 912 & 913 RIGHT ANGLE TOOLS

PennEngineering®

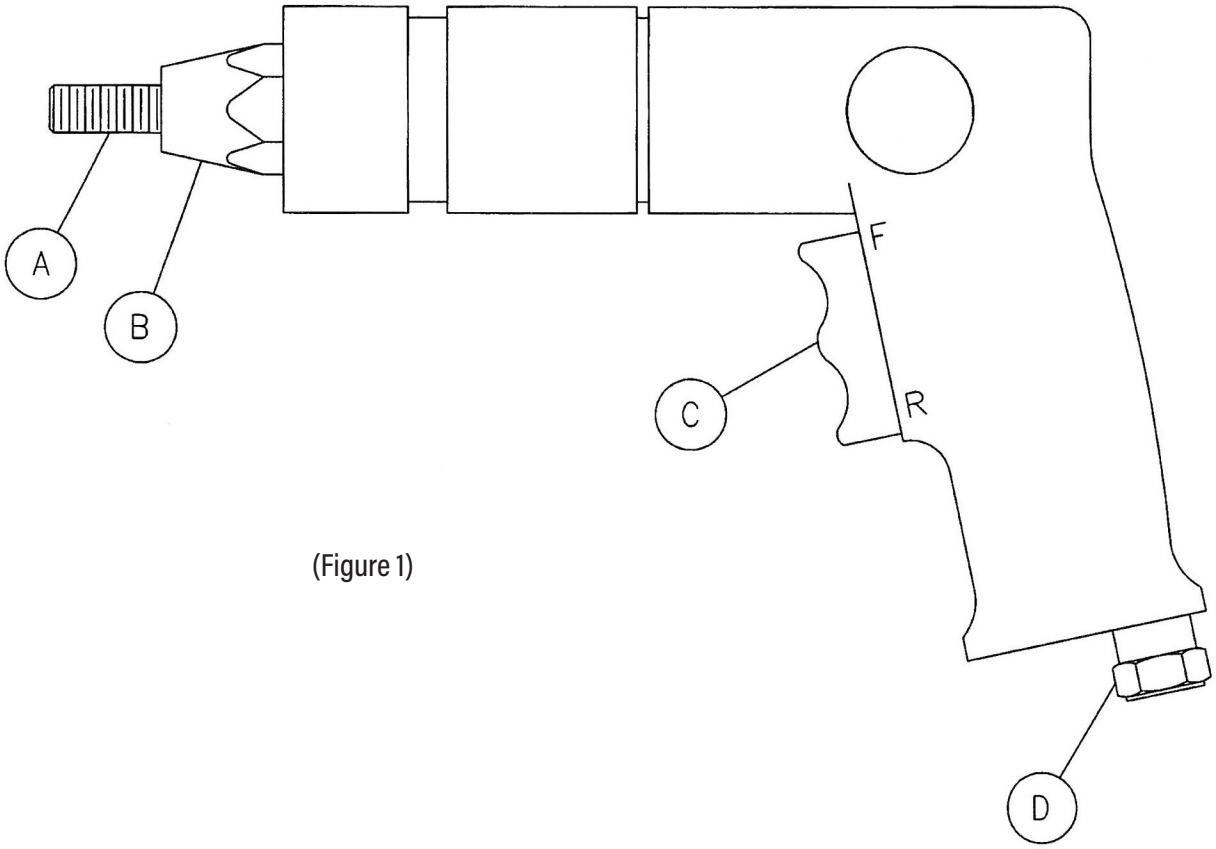

(Figure 1)

MAIN COMPONENTS

A. Socket head cap screw (pull-up stud)
B. Anvil
C. Trigger
   Position 'F' Forward Rotation
   Position 'R' Reverse Rotation
D. Air line connector

© Copyright 2009

GENERAL NOTES:

The model 801, 802, 803, 804 and 806 pneumatic tools are designed to provide a user friendly, light weight, quiet, fast and powerful threaded insert installation tool. They are designed to provide long life and trouble free service.

Filter regulator oil Schrader Bellows® Model No. F442 is recommended for use with these air tools. The performance of these components is reliable and they provide clean, oiled and regulated air to the tools.

Recommended hose size is 5/16" or 3/8" inside the diameter.

If a quick disconnect assembly is used utilize components with an inside diameter of ¼ inch, so that the air supply is not restricted.

It is recommended that the filter regulator oiler be located within sixty inches, or less, from the air tool so that air pressure readings at the gage are indicative of what the tool is actually receiving.

We recommend that you use a good grade of socket head cap screw with good clean threads.

TECHNICAL DATA:

Recommended air pressure: 45 to 100 psi
Weight (801, 802, 803, 804): 2.5 lbs.
Weight (806): 3 lbs.

The air supply to the tools should be dry and free of contamination, to prevent premature wear and tear of the internal components. IT is essential for reliable installation of fasteners, that a filter, pressure regulator, and oiler system be used, and located in close proximity to the tool.

OPERATING INSTRUCTIONS:

With the tool disconnected from the airline, check to see that the socket head cap screw extends beyond the face of the anvil far enough to allow at least one thread of the screw to extend beyond the end of the insert. If the screw is not long enough, measure what is required and get a socket head cap screw that is long enough.

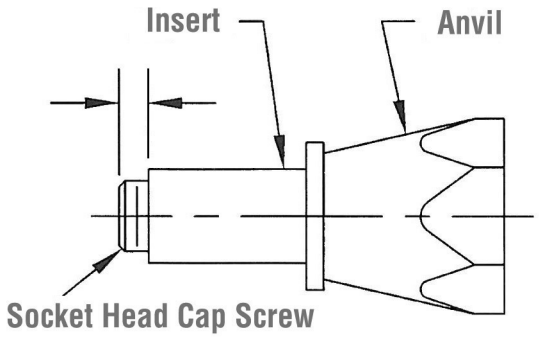

If you set up on a first grip fastener and you are going to install second grip inserts in the same work area, get a screw that is long enough to extend at least one thread beyond the end of the longest fastener.

Now, connect the air line to the tool. Hold the threaded insert to the tool mandrel. Actuate position 'F' of the trigger (figure 1) and start engagement of the insert threads on to the tool mandrel. Stop fastener engagement just before the head of the insert comes in contact with anvil face.

Insert the fastener into the installation hole of a test plate, that is the same material and thickness, as the actual application.

Actuate the position 'F' of the trigger and let the socket head cap screw mandrel drive through the fastener and clinch it securely into the test plate and allow the air tool to stall.

Actuate position 'R' of the trigger (the bottom rocker) and disengage the tool mandrel from the installed fastener.

OPERATING INSTRUCTIONS FOR MODEL 806:

600 RPM Pneumatic spin/spin tool with internal clutch, capable of installing thread sizes of M4-M6, 632-1/4.

With the tool disconnected from the airline, check to see that the socket head cap screw extends beyond the face of the anvil far enough to allow at least one thread of the screw to extend beyond the end of the insert. If the screw is not long enough, measure what is required and get a socket head cap screw that is long enough.

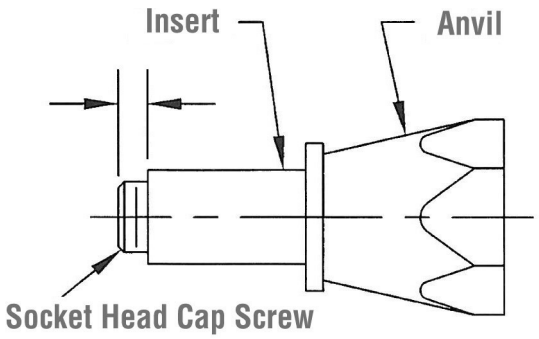

If you set up on a first grip fastener and you are going to install second grip inserts in the same work area, get a screw that is long enough to extend at least one thread beyond the end of the longest fastener.

Now, connect the air line to the tool. Hold the threaded insert to the tool mandrel. Actuate position 'F' of the trigger (figure 1) and start engagement of the insert threads on to the tool mandrel. Stop fastener engagement just before the head of the insert comes in contact with anvil face. Rotate torque adjusting cap (Part #806-39) to desired thread size (M4-M6, 632-1/4).

Insert the fastener into the installation hole of a test plate, that is the same material and thickness, as the actual application.

Actuate the position 'F' of the trigger and let the socket head cap screw mandrel drive through the fastener and clinch it securely into the test plate and allow the air tool to stall.

Actuate position 'R' of the trigger (the bottom rocker) and disengage the tool mandrel from the installed fastener.

PREVENTIVE MAINTENANCE:

Lubricate Socket Head Cap Screw:
It is recommended that you dip the first few threads in light oil every several installations to reduce wear.

Lubrication of Gearing:
All air tools containing gears should be lubricated weekly with standard gear grease. (Caution: excessive lubricant will affect the tools speed and power.)

Flushing of Tool:
It is recommended that air tools be flushed weekly with a solution of three parts cleaning solvent and one part oil.

Proper Handling:
Although very durable, pneumatic tools have sensitive internal components and need to be treated as such. Droppings or dragging these tools, could cause damage to inner mechanism.

If at any time, you have any difficult with the operation or maintenance of this tool, feel free to call collect.

Atlas Customer Service: **(215) 766-5987**
Toll Free: **877-682-2505**
E-mail: **atlas@pemnet.com**

1. Do I need to put my tool on a regulated supply line?

Yes, because it reduces any complications with high pressures and overloads on the tool or the part. Also the supply line should have a filter on it to remove any dirt or any other contaminate from the air supplied.

2. Why does my installation tool strip the threads out of my part?

The power of the tool is too high and needs to be reduced. Air pressure needs to be reduced to reduce the power of the tool.

3. Why do I keep breaking and bending the installation studs?

The power of the tool is too high and needs to be reduced. Air pressure needs to be reduced to reduce the power of the tool.

4. How much air pressure does it take to properly install my part?

A sample instillation needs to be done at various pressure settings to determine a good pressure without damaging the tool or part but fully installs the part. Recommendations are to start with lower pressure.

5. I can't fine tune the line pressure of the supply line to the tool. What do I do?

You must adjust the pressure of the supply line while the tool is running. NO part should be on the tool while doing this.

6. Will my smaller tool or larger tool install a larger or smaller part?

It is not recommended to use the tools for larger or smaller parts than what is recommended, But if very cautious, with pressures you may use a larger tool with a smaller part. You cannot use a smaller tool for a larger part because it can severely damage internal workings of the tool.

7. How often should I do PM on my tool?

Twice in a normal operating day (8 hour usage), you should disconnect the air line and give a small bit of oil into the air inlet of the gun. Once a week you should remove the nose piece from the gun and remove the bearing and cap screw for cleaning and grease.

8. How often should I replace the cap screw or bearing?

Any time you see or feel excessive wear on any of the parts, you should clean or replace them immediately.

9. Can I repair my own tool?

It is not recommended, but you can only if the tool is older than 1 year and the warranty has expired, otherwise you will void the warranty. Also be careful not to damage housing when disassembling.

10. Where do I find the parts list for my gun?

Most of the time there will be a repair manual for your tool in the container that the original shipment came in. There is a parts list and breakdown in this book. If you do not have a repair manual, ask and we can fax you one or even mail or e-mail one. There is a full manual in PDF format available.

11. How do I send my tool in for repairs?

You should call your supplier to let them know that you have a tool or part that needs to be returned to Atlas™ for repairs. Then you or the supplier can call us for a Repair Order number for tracking the tool as it comes in for repair.

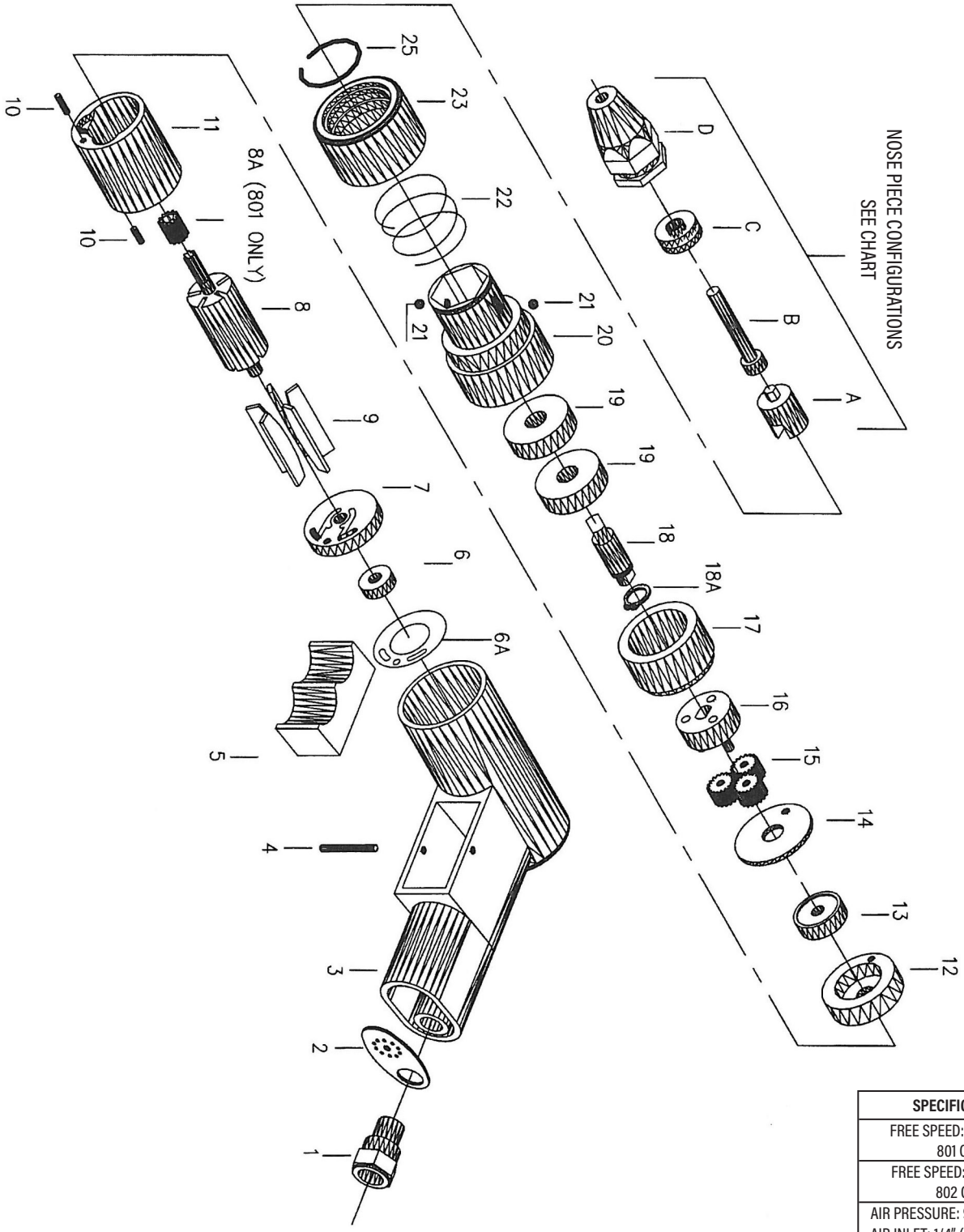

SPECIFICATIONS
FREE SPEED: 3000 (RPM) 801 ONLY
FREE SPEED: 1500 (RPM) 802 ONLY
AIR PRESSURE: 90 PSI AIR INLET: 1/4" (NPT) AIR CONSUMPTION: 5CFM THREAD SIZE: M3, M4 HOSE SIZE: 3/8" (9.5 MM)

801: 4-40, 6-32, 8-32
3MM, 4MM
802: #1024, 1032, 5MM

EXPLODE NO.	DESCRIPTION	ATLAS P/N	QTY.
1	Air Inlet	SPN-00001	1
2	Exhaust diffuser	SPN-00002	1
3	Handle Assembly	SPN-00003	1
4	Roll Pin ø3 X 28 (MM)	SPN-00004	1
5	Trigger	SPN-00005	1
6A	Gasket	SPN-00040	1
6	Ball Bearing (696z)	SPN-0006	1
7	Rear End Plate	SPN-0007	1
8	Rotor 67	SPN-0008	1
8A	Sun Gear (12T)	SPN-00029	1
9	Rotor Blade	SPN-0009	5
10	Roll Pin ø 2.5 X 10 (MM)	SPN-00010	2
11	Cylinder	SPN-00011	1
12	Front End Plate ø 34 X 6 (MM)	SPN-00013	1
13	Ball Bearing (626z)	SPN-00015	1
14	Washer	SPN-00016	1
15	Planet Gear (15T) – (801 only)	SPN-00017	3
15	Planet Gear (18T) – (802 only)	SPN-00026	3
16	Planet Pin (801 only)	SPN-00027	1
16	Planet Pin (802 only)	SPN-00018	1
17	Internal Gear	SPN-00044	1
18	Drive Spindle	SPN-00020	1
18A	Retaining Ring	SPN-00019	1
19	Ball Bearing (6200z)	SPN-00046	2
20	Nose Housing	SPN-00021	1
21	Locking Balls	SPN-00022	2
22	Change Value Spring	SPN-00023	1
23	Quick Change Sleeve	SPN-00024	1
25	Circlip	SPN-00025	1
A	Hex Driver	See Chart Below	1
B	Screw Mandrel	See Chart Below	1
C	Bearings Assy.	See Chart Below	1
D	Anvil	See Chart Below	1

Thread Size	Complete Nose Piece Assembly	A	B	C	D
4-40	AENP-440	AEHD-4	AESH-440-150	AEPB-4	ANSS-4
6-32	AENP-632	AEHD-6	AESH-632-150	AEPB-6	ANSS-6
8-32	AENP-832	AEHD-8	AESH-832-150	AEPB-8	ANSS-8
10-24	AENP-1024	AEHD-10	AESH-1024-150	AEPB-10	ANSS-10
10-32	AENP-1032	AEHD-10	AESH-1032-150	AEPB-10	ANSS-10
M3	AENP-M3	AEHD-M3	AESH-M3-35	AEPB-M3	ANSS-M3
M4	AENP-M4	AEHD-M4	AESH-M4-35	AEPB-M4	ANSS-M4
M5	AENP-M5	AEHD-M5	AESH-M5-45	AEPB-M5	ANSS-M5

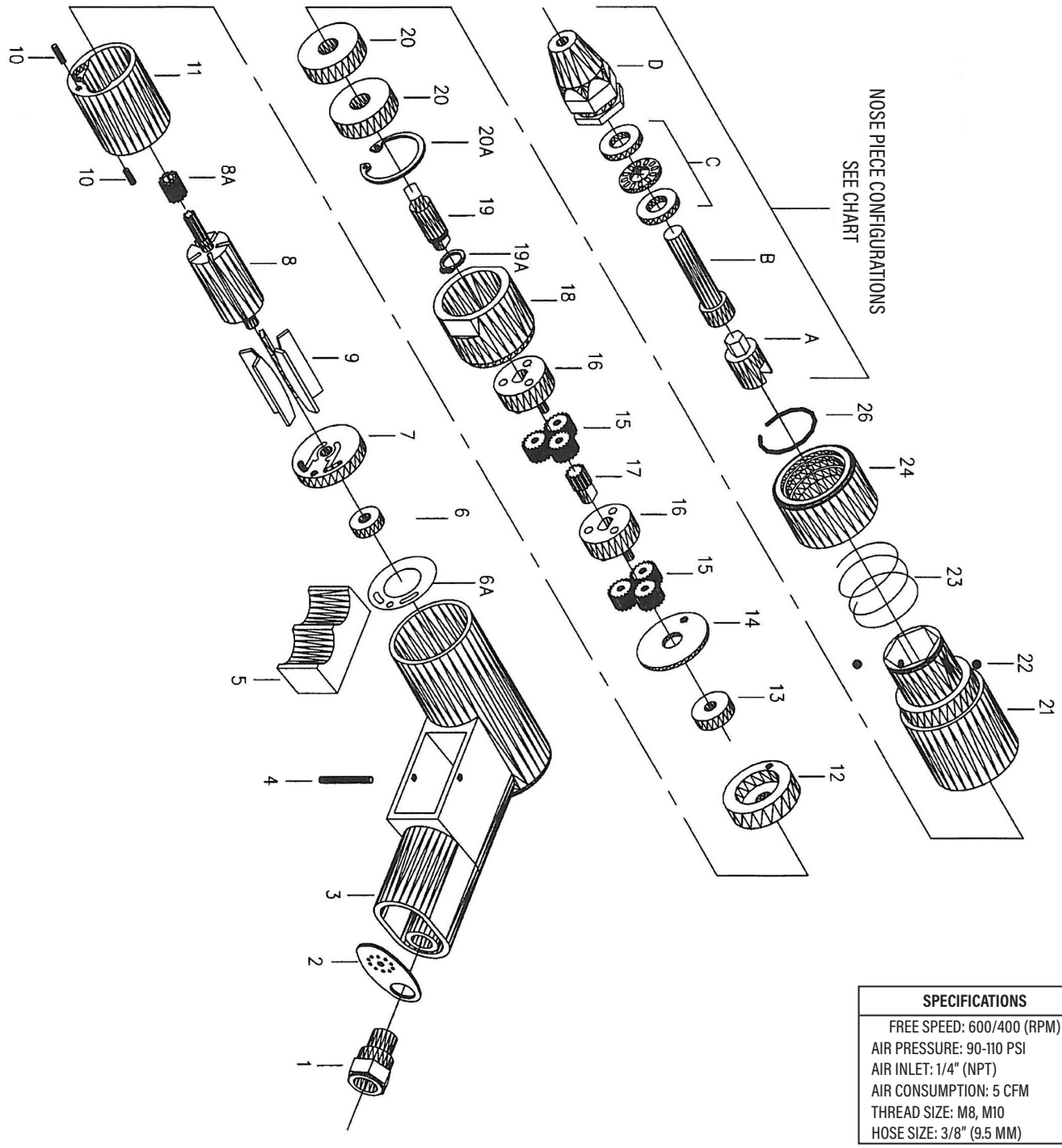

SPECIFICATIONS
FREE SPEED: 600/400 (RPM)
AIR PRESSURE: 90-110 PSI
AIR INLET: 1/4" (NPT)
AIR CONSUMPTION: 5 CFM
THREAD SIZE: M8, M10
HOSE SIZE: 3/8" (9.5 MM)

803: 2520, 2528, 6MM
804: 3118, 3124, 3716, 3718
8MM, 10MM

EXPLODE NO.	DESCRIPTION	ATLAS P/N	QTY.
1	Air Inlet	SPN-00001	1
2	Exhaust diffuser	SPN-00002	1
3	Handle Assembly	SPN-00003	1
4	Roll Pin ø3 X 28 (MM)	SPN-00004	1
5	Trigger	SPN-00005	1
6A	Gasket	SPN-00040	1
6	Ball Bearing (696z)	SPN-00006	1
7	Rear Plate	SPN-00007	1
8A	Sun Gear (#803 only)	SPN-00029	1
8	Rotor 6t (#803 only)	SPN-00008	1
9	Rotor Blade	SPN-0009	5
10	Roll Pin ø 2.5 X 10 (MM)	SPN-00010	2
11	Cylinder	SPN-00011	1
12	Front End Plate ø 34x6 (MM)	SPN-00013	1
12	Front End Plate ø 34x8 (MM)	SPN-00054	1
13	Ball Bearing 626zz (#803)	SPN-00015	1
13	Ball Bearing 698zz (#804)	SPN-00028	1
14	Washer	SPN-00016	1
15	Planet Gear (15t) (#803)	SPN-00017	6
15	Planet Gear (16t) (#804)	SPN-00036	6
16	Gear Cage (#803)	SPN-00027	2
16	Gear Cage (#804)	SPN-00037	2
17	Sun Gear (12t) (#803)	SPN-00041	1
17	Sun Gear (9t) (#804)	SPN-00038	1
18	Internal Gear (#803)	SPN-00045	1
18	Internal Gear (#804)	SPN-00049	1
19	Drive Spindle	SPN-00020	1
19A	Retaining Ring	SPN-00019	1
20	Bearing (6200z)	SPN-00046	2
21	Nose Housing	SPN-00032	1
22	Locking Balls	SPN-00022	2
23	Spring	SPN-00023	1
24	Quick Change Sleeve (#803)	SPN-00024	1
24	Quick Change Sleeve (#804)	SPN-00024	1
26	Circlip	SPN-00025	1
A	Hex Driver	See Chart Below	1
B	Screw Mandrel	See Chart Below	1
C	Bearing Set	See Chart Below	1
D	Anvil	See Chart Below	1

Thread Size	Complete Nose Piece Assembly	A	B	C	D
1/4 -20	AENP-2520	AEHD-25	AESH-2520-175	AEPB-25	ANSS-25
1/4-28	AENP-2528	AEHD-25	AESH-2528-175	AEPB-25	ANSS-25
5/16-18	AENP-3118	AEHD-31	AESH-3118-175	AEPB-31	ANSS-31
5/16-24	AENP-3124	AEHD-31	AESH-3124-175	AEPB-31	ANSS-31
3/8-16	AENP-3716	AEHD-37	AESH-3716-175	AEPB-37	ANSS-37
3/8-24	AENP-3724	AEHD-37	AESH-3724-175	AEPB-37	ANSS-37
M6	AENP-M6	AEHD-M6	AESH-M6-45	AEPB-M6	ANSS-M6
M8	AENP-M8	AEHD-M8	AESH-M8-45	AEPB-M8	ANSS-M8
M10	AENP-M10	AEHD-M10	AESS-M10-45	AEPB-M10	ANSS-M10

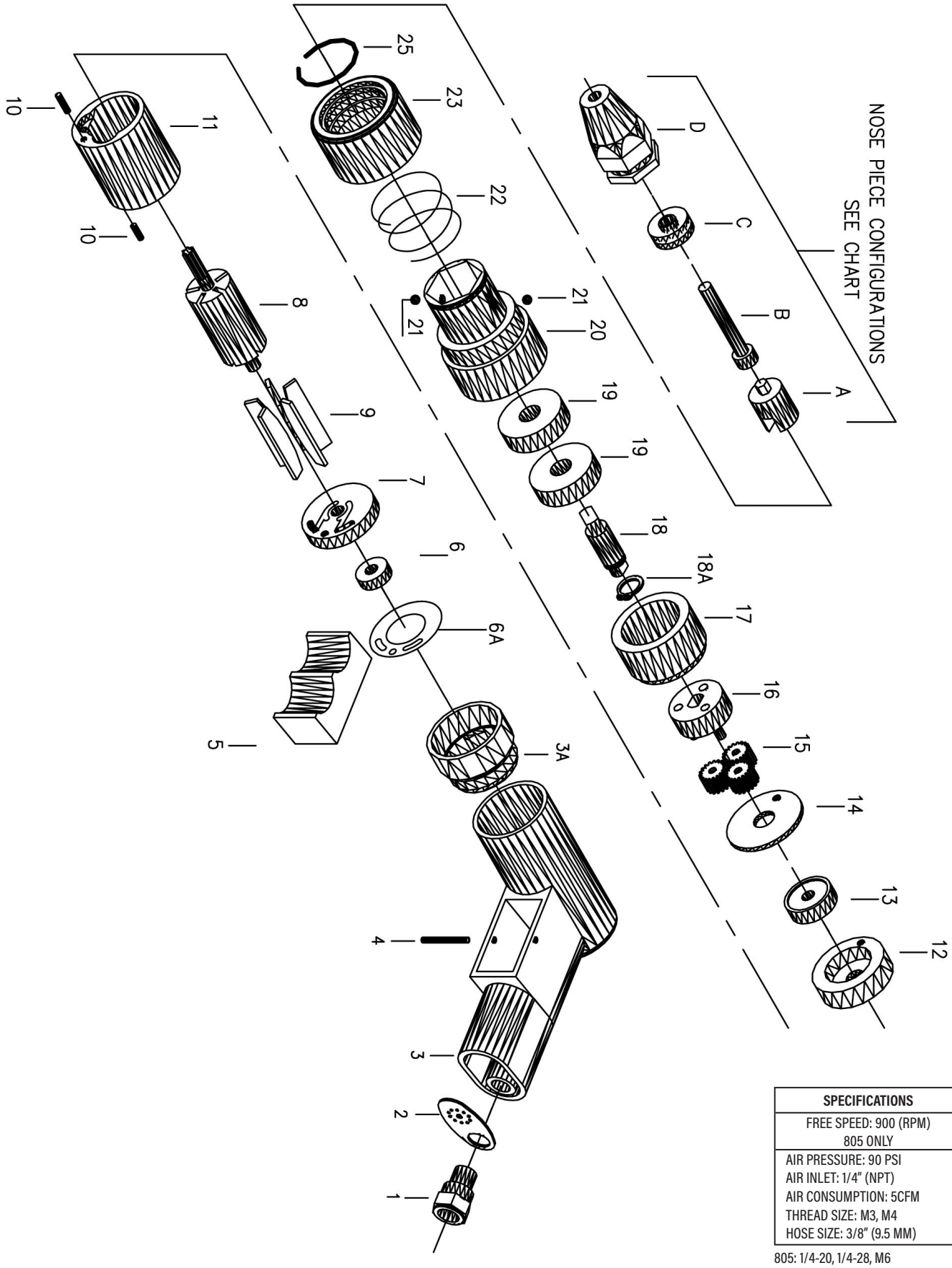

SPECIFICATIONS
FREE SPEED: 900 (RPM) 805 ONLY
AIR PRESSURE: 90 PSI AIR INLET: 1/4" (NPT) AIR CONSUMPTION: 5CFM THREAD SIZE: M3, M4 HOSE SIZE: 3/8" (9.5 MM)

805: 1/4-20, 1/4-28, M6

EXPLODE NO.	DESCRIPTION	ATLAS P/N	QTY.
1	Air Inlet	SPN-00001	1
2	Exhaust Diffuser	SPN-00002	1
3	Handle Assembly	SPN-00003	1
3A	Handle Extension	SPN-00034	1
4	Roll Pin ø3 X 28 (MM)	SPN-00004	1
5	Trigger	SPN-00005	1
6	Ball Bearing (696z)	SPN-00006	1
6A	Gasket	SPN-00040	1
7	Rear End Plate	SPN-00007	1
8	Rotor 6T	SPN-00052	1
9	Rotor Blade	SPN-00053	5
10	Roll Pin ø2.5 X 10 (MM)	SPN-00010	2
11	Cylinder	SPN-00055	1
12	Front End Plate ø34x6 (MM)	SPN-00013	1
13	Ball Bearing (626z)	SPN-00015	1
14	Washer	SPN-00016	1
15	Planet Gear (18T)	SPN-00026	3
16	Planet Pin	SPN-00018	1
17	Internal Gear	SPN-00044	1
18	Drive Spindle	SPN-00020	1
18A	Retaining Ring	SPN-00019	1
19	Ball Bearing (6200z)	SPN-00046	2
20	Nose Housing	SPN-00021	1
21	Locking Balls	SPN-00022	2
22	Change Value Spring	SPN-00023	1
23	Quick Change Sleeve	SPN-00024	1
25	Circlip	SPN-00025	1
A	Hex Driver	See Chart Below	1
B	Screw Mandrel	See Chart Below	1
C	Bearings Assy.	See Chart Below	1
D	Anvil	See Chart Below	1

Thread Size	Complete Nose Piece Assembly	A	B	C	D
1/4 -20	AENP-2520	AEHD-25	AESH-2520-175	AEPB-25	ANSS-25
1/4-28	AENP-2528	AEHD-25	AESH-2528-175	AEPB-25	ANSS-25
M6	AENP-M6	AEHD-M6	AESH-M6-45	AEPB-M6	ANSS-M6

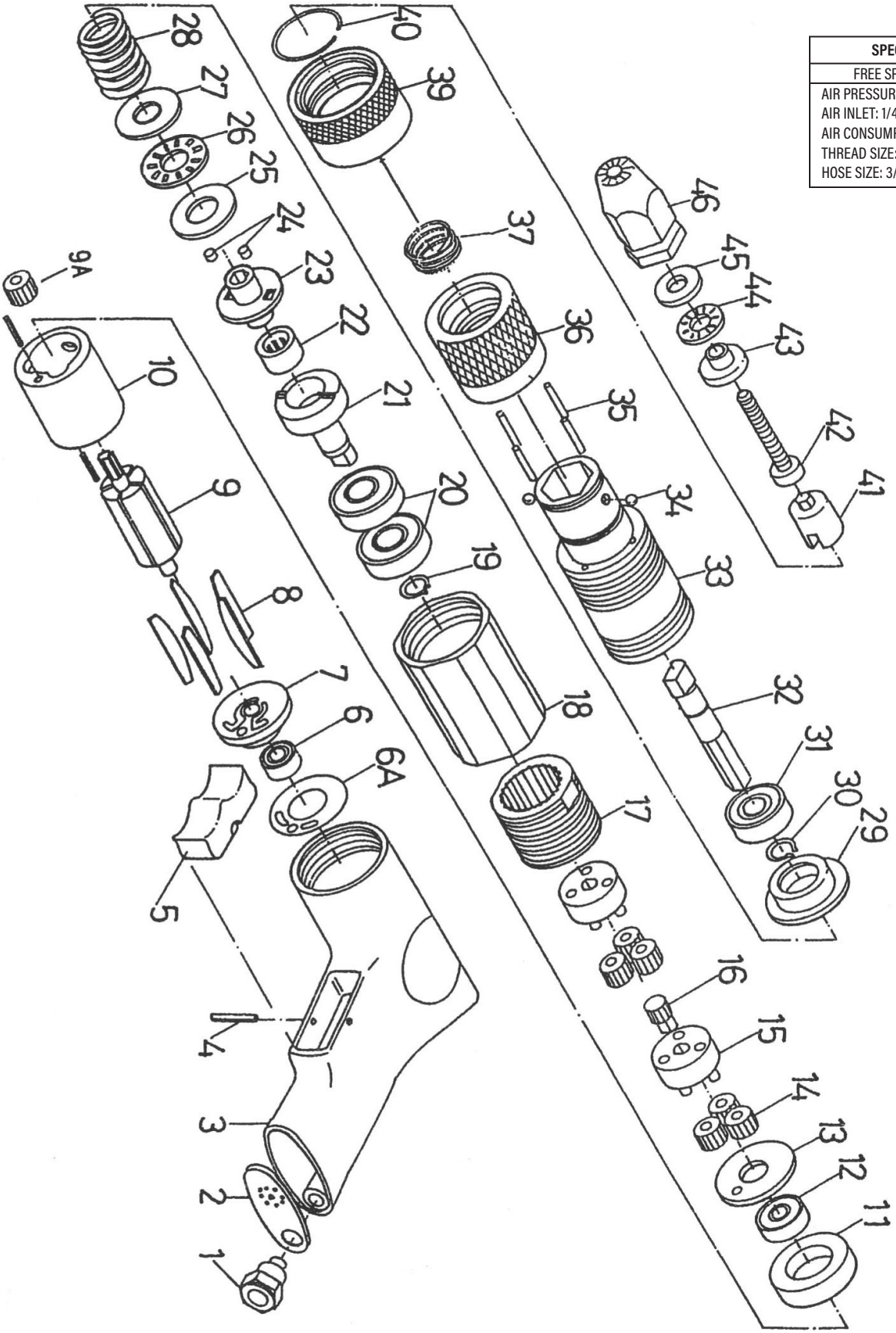

SPECIFICATIONS
FREE SPEED: 600 (RPM)
AIR PRESSURE: 90 PSI AIR INLET: 1/4" (NPT) AIR CONSUMPTION: 5CFM THREAD SIZE: #4-40 - 3/8" HOSE SIZE: 3/8" (9.5 MM)

PART NO.	DESCRIPTION	QTY.
806-1	Air Inlet	1
806-2	Exhaust Diffuser	1
806-3	Handle Assembly	1
806-4	Pin	1
806-5	Trigger	1
806-6A	Gasket	1
806-6	Ball Bearing (696)	1
806-7	Rear Plate (SPN-00007)	1
806-8	Rotor Blade (SPN-00009)	5
806-9	Rotor	1
806-9A	Planet Gear	1
806-10	Cylinder	1
806-11	Front End Plate (SPN-00054)	1
806-12	Ball Bearing (626)	1
806-13	Washer	1
806-14	Planet Gear (15T)	6
806-15	Planet Pin	2
806-16	Gear	1
806-17	Planet Cage (Long)	1
806-18	Connecting Tube (Long)	1
806-19	Retaining Ring	1
806-20	Ball Bearing	2
806-21	Clutch	1
806-22	Ball Bearing	1
806-23	Steel Ball Fixing Plate	1
806-24	Cam Rider Ball	2
806-25	Washer	1
806-26	Ball Bearing	1
806-27	Washer	1
806-28	Change Value Spring	1
806-29	Drive Housing	1
806-30	Retaining Ring	1
806-31	Ball Bearing	1
806-32	Internal Gear	1
806-33	Nose Housing	1
806-34	Cam Rider Ball	2
806-35	Pin	4
806-36	Torque Adjusting Cap	1
806-37	Change Value Spring	1
806-39	Pin Stopper Washer	1
806-40	Spring Receiver	1
806-41	Spindle (Back)	1
806-42	Screw	1
806-43	Spindle Lock Screw	1
806-44	Ball Bearing	1
806-45	Washer	1
806-46	Spindle Cover	1

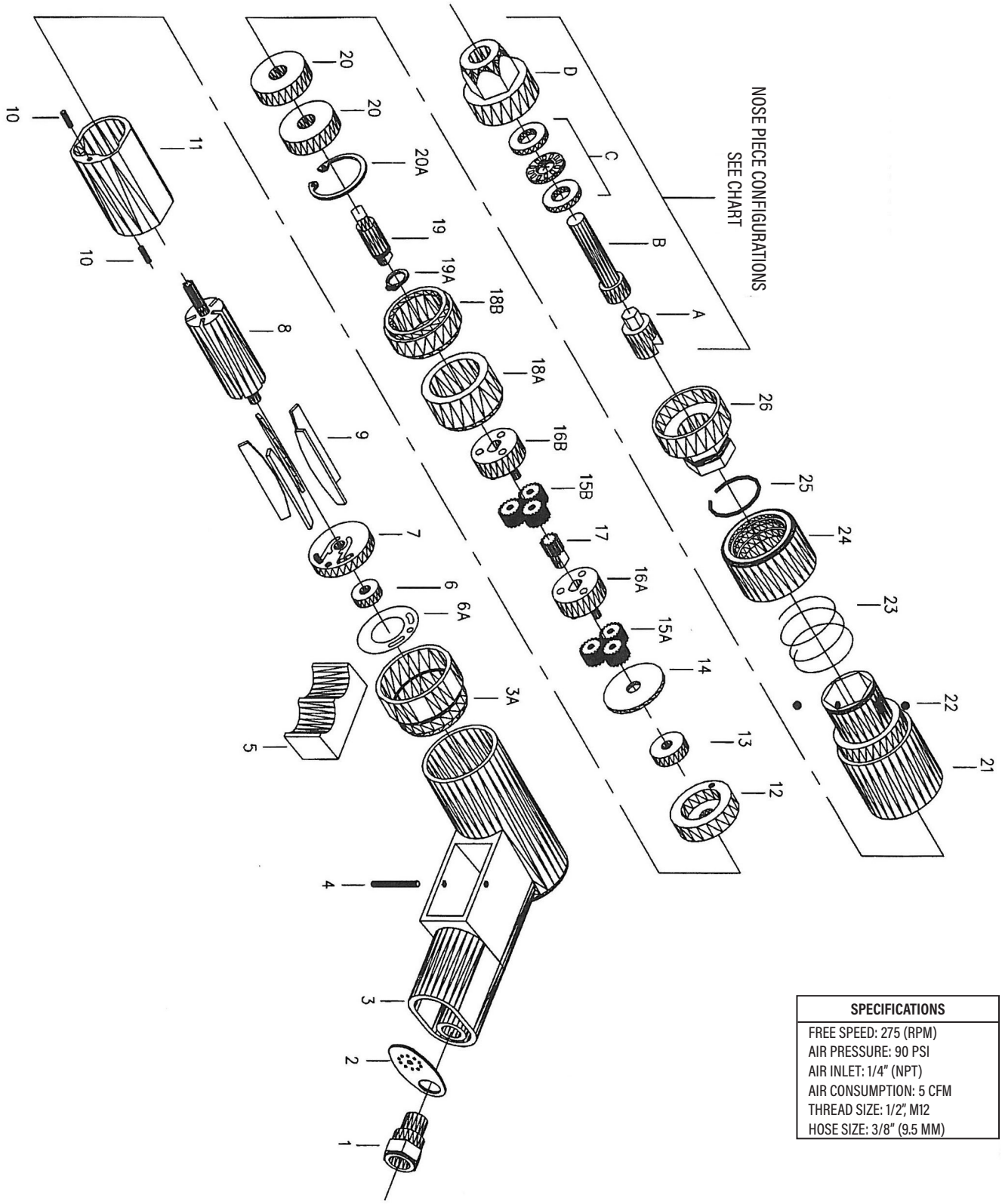

SPECIFICATIONS
FREE SPEED: 275 (RPM)
AIR PRESSURE: 90 PSI
AIR INLET: 1/4" (NPT)
AIR CONSUMPTION: 5 CFM
THREAD SIZE: 1/2", M12
HOSE SIZE: 3/8" (9.5 MM)

EXPLODE NO.	DESCRIPTION	ATLAS P/N	QTY.
1	Air Inlet	SPN-00001	1
2	Exhaust diffuser	SPN-00002	1
3	Handle Assembly	SPN-00003	1
3A	Handle Extension	SPN-00034	1
4	Roll Pin ø3 X 28 (MM)	SPN-00004	1
5	Trigger	SPN-00005	1
6	Ball Bearing (696z)	SPN-00006	1
6A	Gasket	SPN-00040	1
7	Rear End Plate	SPN-00007	1
8	Rotor 6t (Long)	SPN-00052	1
9	Rotor Blade	SPN-00053	5
10	Roll Pin ø 2.5 X 10 (MM)	SPN-00010	2
11	Cylinder	SPN-00055	1
12	Front End Plate ø 34x6 (MM)	SPN-00013	1
13	Ball Bearing 626zz	SPN-00015	1
14	Washer	SPN-00016	1
15A	Planet Gear 18t	SPN-00026	3
15B	Planet Gear 16t	SPN-00036	3
16A	Gear Cage	SPN-00018	1
16B	Gear Cage	SPN-00037	1
17	Sun Gear (9t)	SPN-00038	1
18A	Internal Gear (#1)	SPN-00056	1
18B	Internal Gear (#2)	SPN-00057	1
19	Drive Spindle	SPN-00020	1
19A	Retaining Ring	SPN-00019	1
20	Bearing 6200z	SPN-00046	2
20A	Retaining Clip	SPN-00047	1
21	Nose Housing	SPN-00032	1
22	Locking Balls	SPN-00022	2
23	Change Value Spring	SPN-00023	1
24	Quick Change Sleeve	SPN-00024	1
25	Circlip	SPN-00025	1
26	Spindle Cover	SPN-00050	1
A	Hex Driver	See Chart Below	1
B	Screw Mandrel	See Chart Below	1
C	Bearing Set	See Chart Below	1
D	Anvil	See Chart Below	1

Thread Size	Complete Nose Piece Assembly	A	B	C	D
1/2-13	AENP-5013	AEHD-50	AESH-5013-225	AEPB-50	ANSS-50
1/2-20	AENP-5020	AEHD-50	AESH-5020-225	AEPB-50	ANSS-50
7/16-20	AENP-4320	AEHD-43	AESH-4320-225	AEPB-43	ANSS-43
M12	AENP-M12	AEHD-M12	AESH-M12-45	AEPB-M12	ANSS-M12

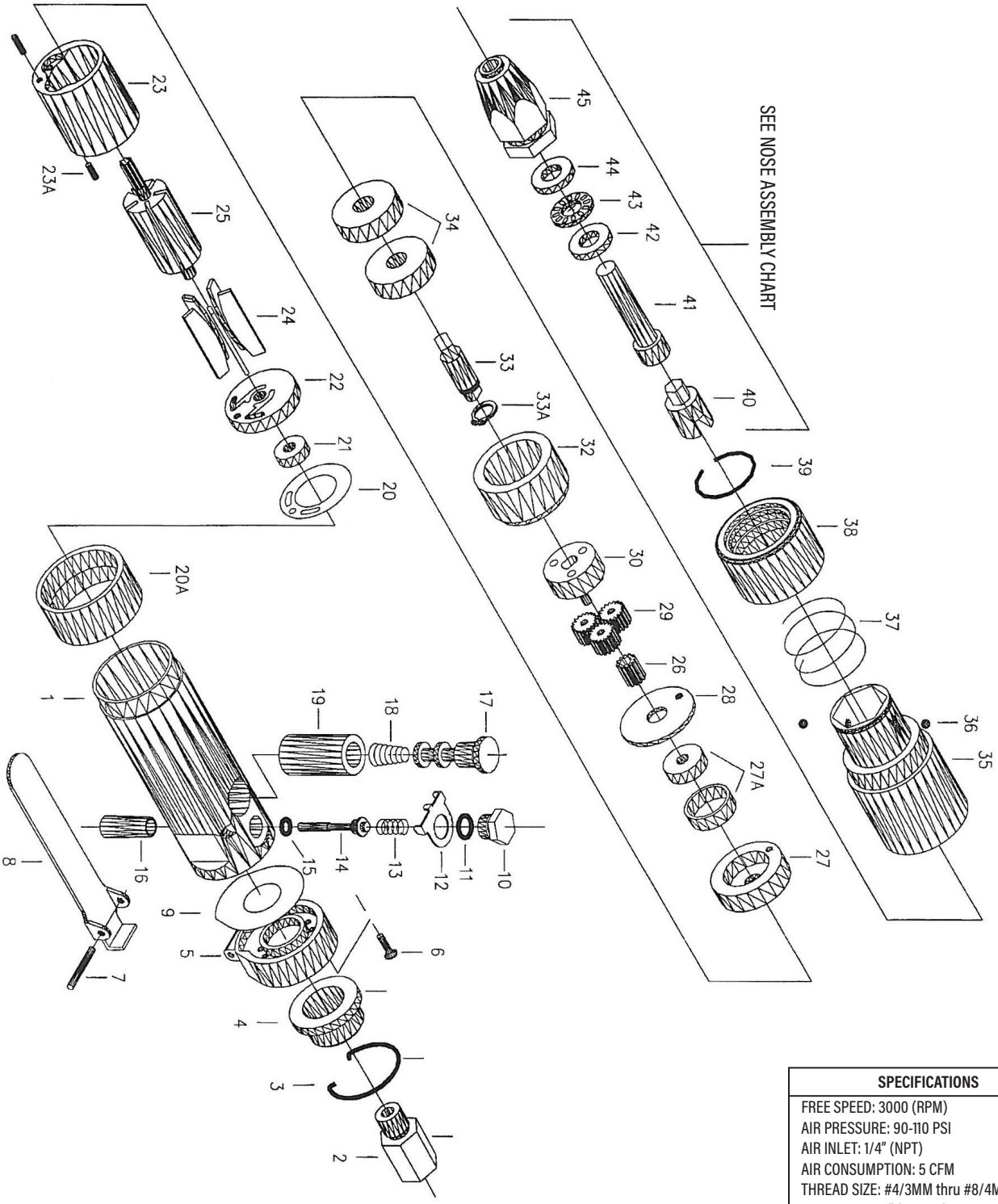

SPECIFICATIONS
FREE SPEED: 3000 (RPM)
AIR PRESSURE: 90-110 PSI
AIR INLET: 1/4" (NPT)
AIR CONSUMPTION: 5 CFM
THREAD SIZE: #4/3MM thru #8/4MM
HOSE SIZE: 3/8" (9.5 MM)

EXPLODE NO.	DESCRIPTION	ATLAS P/N	QTY.
1	Motor Housing	SPN-00150	1
2	Inlet Bushing	SPN-00001	1
3	Stop Ring	SPN-00151	1
4	Deflector	SPN-00152	1
5	Housing Cap	SPN-00153	1
6	Screw	SPN-00154	2
7	Screw Pin	SPN-00155	1
8	Lever	SPN-00156	1
9	Gasket	SPN-00157	1
10	Valve Screw	SPN-00158	1
11	"O"-Ring	SPN-00159	1
12	Reverse Retainer	SPN-00160	1
13	Valve Spring	SPN-00161	1
14	Throttle Valve	SPN-00162	1
15	"O"-Ring	SPN-00163	1
16	Valve Bushing	SPN-00164	1
17	Reverse Valve	SPN-00165	1
18	Reverse Valve Bushing	SPN-00166	1
19	Reverse Valve Bushing	SPN-00167	1
20A	Lock Ring	SPN-00168	1
20	Gasket	SPN-00040	1
21	Ball Bearing (696 ZZ)	SPN-00006	1
22	Rear End Plate	SPN-00007	1
23	Cylinder	SPN-00011	1
23A	Roll Pin (ø2.55mmX ø10mm)	SPN-00010	2
24	Rotor Blades	SPN-00009	5
25	Rotor (6t)	SPN-00008	1
26	Sun Gear	SPN-00029	1
27	Front End Plate	SPN-00013	1
27A	Ball Bearing (626 ZZ)	SPN-00015	1
28	Washer	SPN-00016	1
29	Planet Gear (15t)	SPN-00017	3
30	Gear Cage (.700)	SPN-00027	1
32	Internal Gear	SPN-00044	1
33A	Retainer Ring	SPN-00019	1
33	Driver Spindle	SPN-00020	1
34	Ball Bearing (6200 Z)	SPN-00046	2
34A	Retaining Ring	SPN-00047	1
35	Nose Housing	SPN-00021	1
36	Locking Balls	SPN-00022	2
37	Spring	SPN-00023	1
38	Quick Change Sleeve	SPN-00024	1
39	Circlip	SPN-00025	1
40	Draw Bolt Driver	See Charts On Pages 25, 26 & 27	1
41	Screw	See Charts On Pages 25, 26 & 27	1
42	Rear Thrust Plate	See Charts On Pages 25, 26 & 27	1
43	Roller Bearing	See Charts On Pages 25, 26 & 27	1
44	Washer	See Charts On Pages 25, 26 & 27	1
45	Nose Piece	See Charts On Pages 25, 26 & 27	1

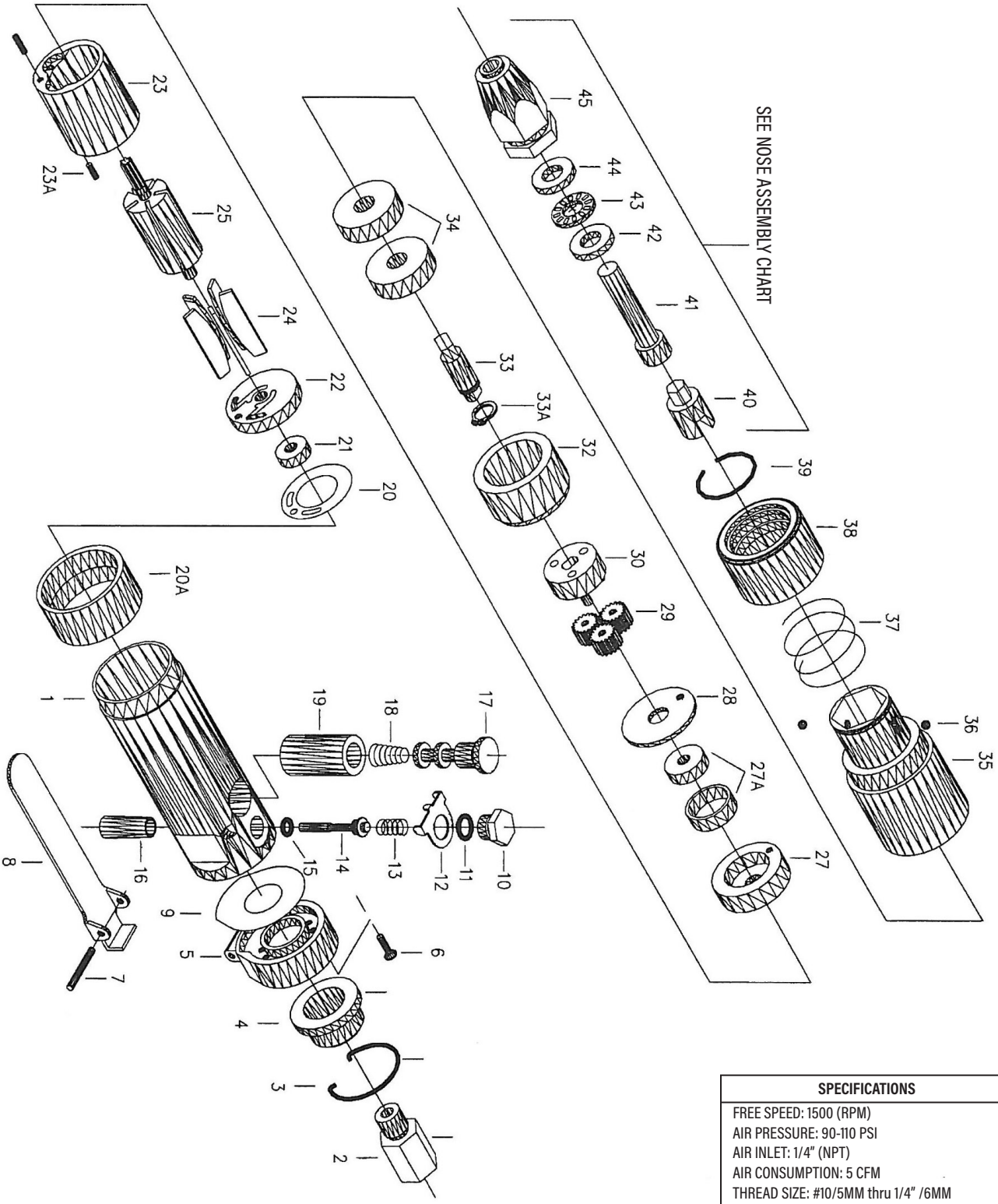

SPECIFICATIONS
FREE SPEED: 1500 (RPM)
AIR PRESSURE: 90-110 PSI
AIR INLET: 1/4" (NPT)
AIR CONSUMPTION: 5 CFM
THREAD SIZE: #10/5MM thru 1/4" /6MM
HOSE SIZE: 3/8" (9.5 MM)

NO. PART NO.	DESCRIPTION	PART NO.	QTY.
1	Motor Housing	SPN-00150	1
2	Inlet Bushing	SPN-00001	1
3	Stop Ring	SPN-00151	1
4	Deflector	SPN-00152	1
5	Housing Cap	SPN-00153	1
6	Screw	SPN-00154	2
7	Screw Pin	SPN-00155	1
8	Lever	SPN-00156	1
9	Gasket	SPN-00157	1
10	Valve Screw	SPN-00158	1
11	"O"-Ring	SPN-00159	1
12	Reverse Retainer	SPN-00160	1
13	Valve Spring	SPN-00161	1
14	Throttle Valve	SPN-00162	1
15	"O"-Ring	SPN-00163	1
16	Valve Bushing	SPN-00164	1
17	Reverse Valve	SPN-00165	1
18	Reverse Valve Bushing	SPN-00166	1
19	Reverse Valve Bushing	SPN-00167	1
20A	Lock Ring	SPN-00168	1
20	Gasket	SPN-00040	1
21	Ball Bearing (696 ZZ)	SPN-00006	1
22	Rear End Plate	SPN-00007	1
23	Cylinder	SPN-00011	1
23A	Roll Pin (ø2.55mmX ø10mm)	SPN-00010	2
24	Rotor Blades	SPN-00009	5
25	Rotor (6t)	SPN-00008	1
27	Front End Plate	SPN-00013	1
27A	Ball Bearing (626 ZZ)	SPN-00015	1
28	Washer	SPN-00016	1
29	Planet Gear (18t)	SPN-00017	3
30	Gear Cage (.638)	SPN-00027	1
32	Internal Gear	SPN-00044	1
33A	Retainer Ring	SPN-00019	1
33	Driver Spindle	SPN-00020	1
34	Ball Bearing (6200 Z)	SPN-00046	2
34A	Retaining Ring	SPN-00047	1
35	Nose Housing	SPN-00021	1
36	Locking Balls	SPN-00022	2
37	Spring	SPN-00023	1
38	Quick Change Sleeve	SPN-00024	1
39	Circlip	SPN-00025	1
40	Draw Bolt Driver	See Charts On Pages 25, 26 & 27	1
41	Screw	See Charts On Pages 25, 26 & 27	1
42	Rear Thrust Plate	See Charts On Pages 25, 26 & 27	1
43	Roller Bearing	See Charts On Pages 25, 26 & 27	1
44	Washer	See Charts On Pages 25, 26 & 27	1
45	Nose Piece	See Charts On Pages 25, 26 & 27	1

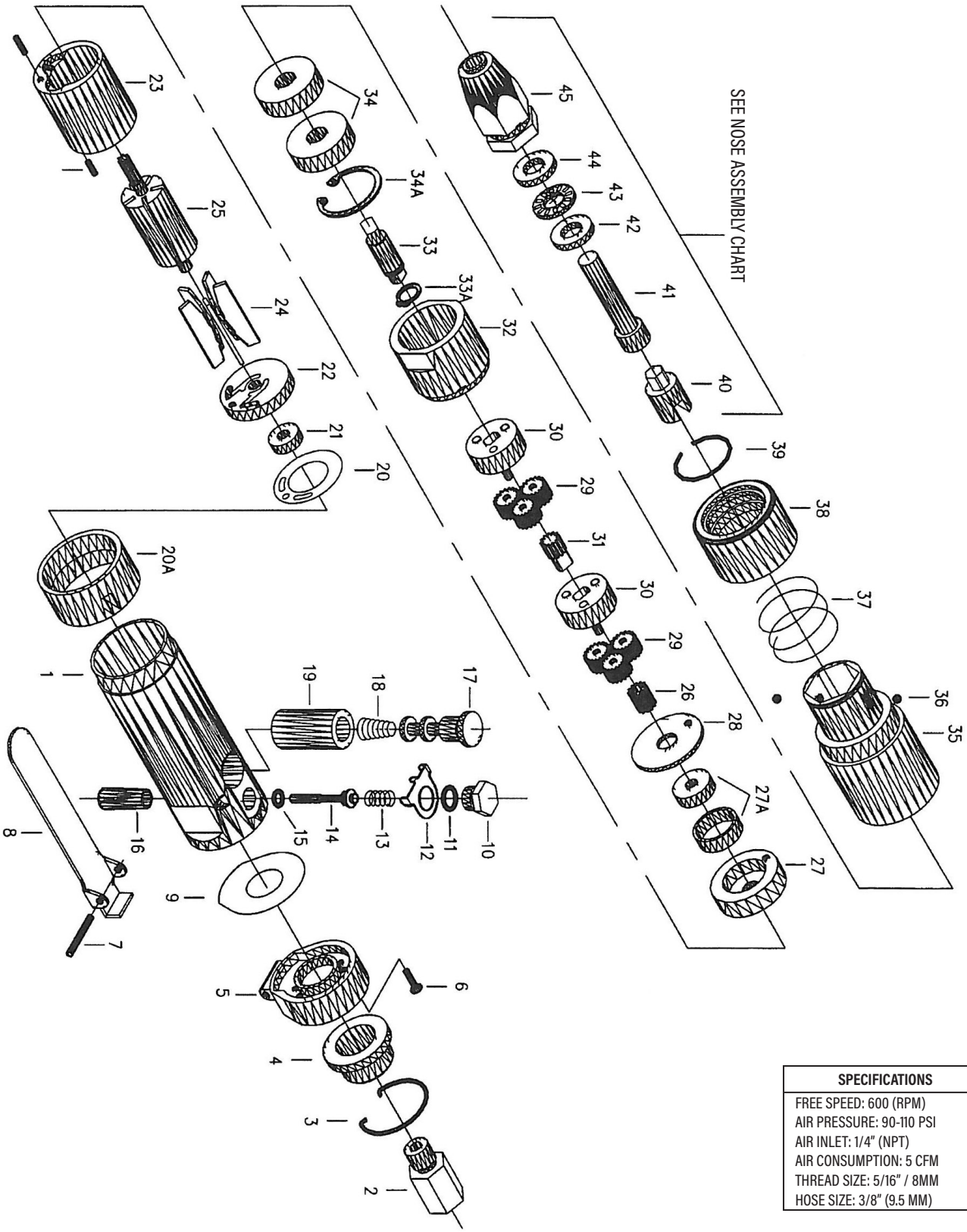

SPECIFICATIONS
FREE SPEED: 600 (RPM)
AIR PRESSURE: 90-110 PSI
AIR INLET: 1/4" (NPT)
AIR CONSUMPTION: 5 CFM
THREAD SIZE: 5/16" / 8MM
HOSE SIZE: 3/8" (9.5 MM)

EXPLODE NO.	DESCRIPTION	PART NO.	QTY.
1	Motor Housing	SPN-00150	1
2	Inlet Bushing	SPN-00001	1
3	Stop Ring	SPN-00151	1
4	Deflector	SPN-00152	1
5	Housing Cap	SPN-00153	1
6	Screw	SPN-00154	2
7	Screw Pin	SPN-00155	1
8	Lever	SPN-00156	1
9	Gasket	SPN-00157	1
10	Valve Screw	SPN-00158	1
11	"O"-Ring	SPN-00159	1
12	Reverse Retainer	SPN-00160	1
13	Valve Spring	SPN-00161	1
14	Throttle Valve	SPN-00162	1
15	"O"-Ring	SPN-00163	1
16	Valve Bushing	SPN-00164	1
17	Reverse Valve	SPN-00165	1
18	Reverse Valve Bushing	SPN-00166	1
19	Reverse Valve Bushing	SPN-00167	1
20A	Lock Ring	SPN-00168	1
20	Gasket	SPN-00040	1
21	Ball Bearing (696 ZZ)	SPN-00006	1
22	Rear End Plate	SPN-00007	1
23	Cylinder	SPN-00011	1
23A	Roll Pin (ø2.55mmX ø10mm)	SPN-00010	2
24	Rotor Blades	SPN-00009	5
25	Rotor (6t)	SPN-00008	1
26	Sun Gear	SPN-00029	1
27	Front End Plate	SPN-00013	1
27A	Ball Bearing (626 ZZ)	SPN-00015	1
28	Washer	SPN-00016	1
29	Planet Gear (15t)	SPN-00017	6
30	Gear Cage	SPN-00027	2
31	Sun Gear (12t)	SPN-00041	1
32	Internal Gear	SPN-00045	1
33A	Retainer Ring	SPN-00019	1
33	Driver Spindle	SPN-00020	1
34A	Retaining Ring	SPN-00047	1
34	Ball Bearing (6200 Z)	SPN-00046	2
35	Nose Housing	SPN-00021	1
36	Locking Balls	SPN-00022	2
37	Spring	SPN-00023	1
38	Quick Change Sleeve	SPN-00024	1
39	Circlip	SPN-00025	1
40	Draw Bolt Driver	See Charts On Pages 25, 26 & 27	1
41	Screw	See Charts On Pages 25, 26 & 27	1
42	Rear Thrust Plate	See Charts On Pages 25, 26 & 27	1
43	Roller Bearing	See Charts On Pages 25, 26 & 27	1
44	Washer	See Charts On Pages 25, 26 & 27	1
45	Nose Piece	See Charts On Pages 25, 26 & 27	1

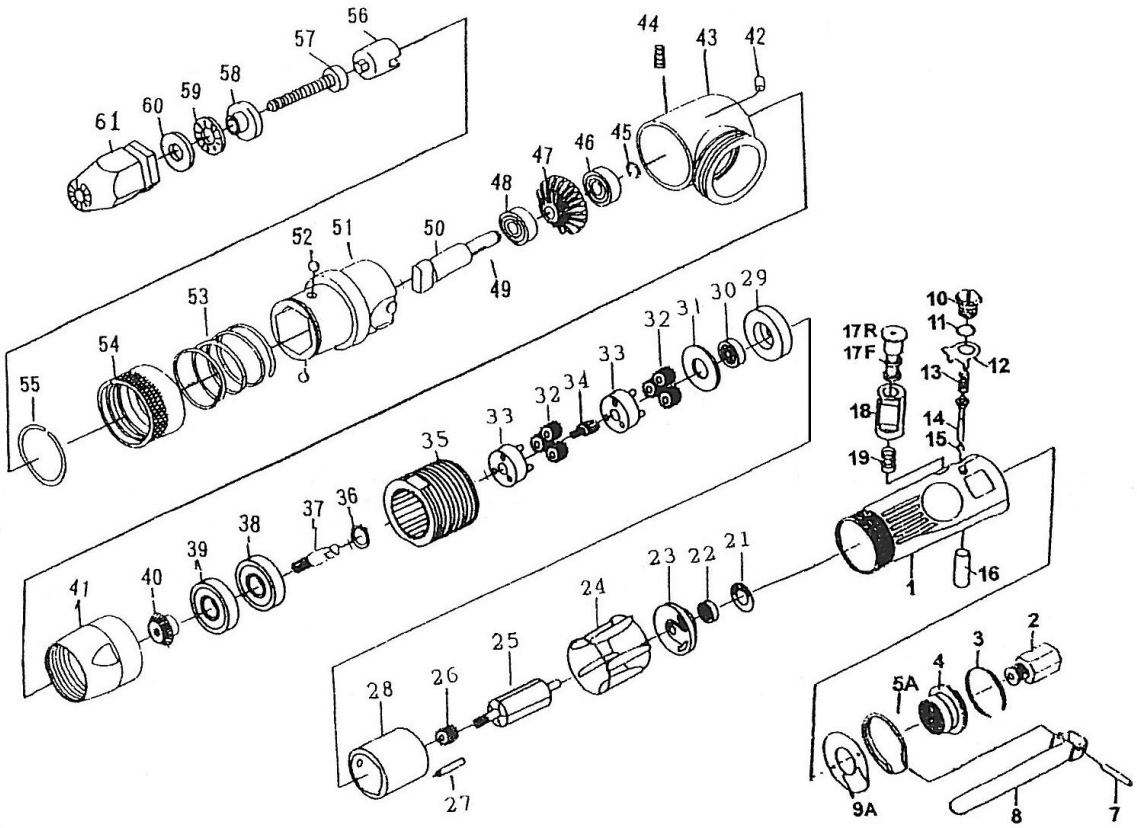

PART NO.	DESCRIPTION	QTY.	PART NO.	DESCRIPTION	QTY.
913-1	MOTOR HOUSING	1	912-33	GEAR CAGE	1
913-2	AIR INLET	1	913-33	GEAR CAGE	2
913-3	RETAINER RING	1	913-34	SUN GEAR (12T)	1
913-4	DEFLECTOR	1	911-35	INTERNAL GEAR	1
913-5A	SILENCER	2	912-35	INTERNAL GEAR	1
913-7	LEVER PIN	1	913-35	INTERNAL GEAR	1
913-8	LEVER	1	913-36	RETAINING RING	1
913-9A	EXHAUST COVER	1	913-37	GEAR SPINDLE	1
913-10	VALVE SCREW	1	913-38	BALL BEARING (6000)	1
913-11	O-RING	1	913-39	BALL BEARING (6001)	1
913-12	REVERSE RETAINER	1	913-40	PINION	1
913-13	VALVE SPRING	1	912-41	LOCK RING	1
913-14	THROTTLE VALVE	1	913-41	LOCK RING	1
913-15	O-RING	1	913-42	BALL CAP	1
913-16	VALVE BRUSHING	1	913-43	ANGLE HOUSING	1
913-17R	REVERSE VALVE (W TYPE)	1	913-44	SET CAP	1
913-17F	REVERSE VALVE 9S TYPE)	1	913-45	RETAINER RING	1
913-18	REVERSE VALVE BUSHING	1	913-46	BALL BEARING (698ZZ)	1
913-19	REVERSE VALVE SPRING	1	913-47	GEAR	1
913-21	GASKET	1	913-48	BALL BEARING (6000zZ)	1
913-22	BALL BEARING 9696ZZ	1	913-49	KEY	1
913-23	REAR END PLATE	1	913-50	SPINDLE	1
913-24	ROTOR BLADE	5	913-51	NOSE HOUSING	1
913-25	ROTOR (6T)	1	913-52	LOCKING BALLS	1
913-26	PLANET GEAR (12 T)	1	913-53	CHANGE VALUE SPRING	2
913-27	ROLL PIN (Ø2.5*Ø10)	2	913-54	QUICK CHANGE SLEEVE	1
913-28	CYLINDER	1	913-55	C CLIP	1
913-29	FRONT END PLATE (Ø34*Ø6)	1	913-56	DRAW BOLT DRIVER	1
913-30	BALL BEARING (626ZZ)	1	913-57	SCREW	1
913-31	WASHER	1	913-58	REAR THRUST PLATE	1
911-32	PLANET GEAR (15T)	3	913-59	ROLLER BEARINGS	1
912-32	PLANET GEAR (18T)	3	913-60	WASHER	1
913-32	PLANET GEAR (15T)	6	913-61	NOSE PIECE	1
911-33	GEAR CAGE	1			

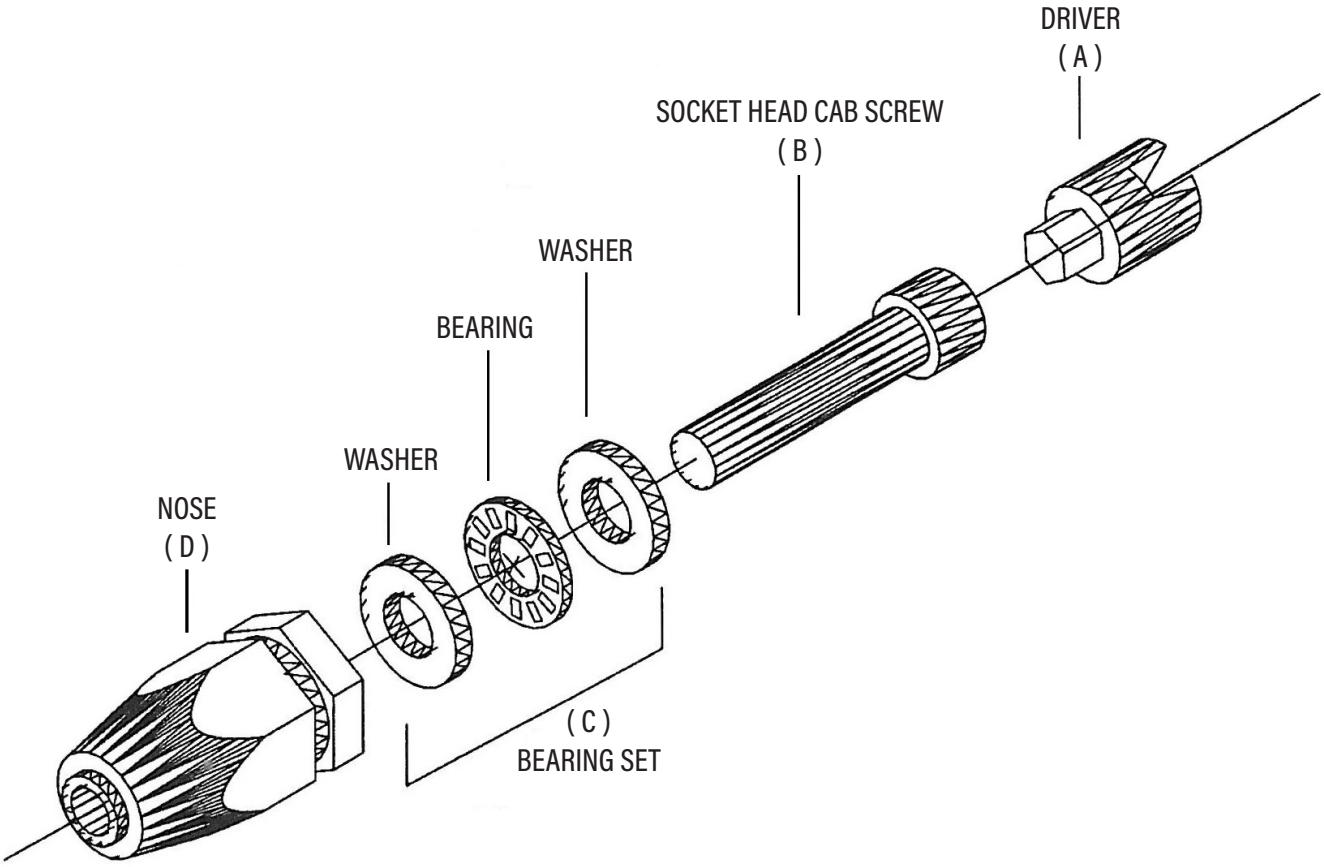

PNEUMATIC INSTALLATION TOOL NOSE ASSEMBLY #4-3MM THROUGH 3/8-10MM

Thread Size	Complete Nose Piece Assembly	A	B	C	D
4-40	AENP-440	AEHD-4	AESH-440-150	AEPB-4	ANSS-4
6-32	AENP-632	AEHD-6	AESH-632-150	AEPB-6	ANSS-6
8-32	AENP-832	AEHD-8	AESH-832-150	AEPB-8	ANSS-8
M3	AENP-M3	AEHD-M3	AESH-M3-150	AEPB-M3	ANSS-M3
M4	AENP-M4	AEHD-M4	AESH-M4-150	AEPB-M4	ANSS-M4
1/4-20	AENP-2520	AEHD-25	AESH-2520-175	AEPB-25	ANSS-25
1/4-28	AENP-2528	AEHD-25	AESH-2528-175	AEPB-25	ANSS-25
5/16-18	AENP-3118	AEHD-31	AESH-3118-175	AEPB-31	ANSS-31
5/16-24	AENP-3124	AEHD-31	AESH-3124-175	AEPB-31	ANSS-31
M8	AENP-M8	AEHD-M8	AESH-M8-175	AEPB-M8	ANSS-M8
3/8-16	AENP-3716	AEHD-37	AESH-3716-175	AEPB-37	ANSS-37
3/8-24	AENP-3724	AEHD-37	AESH-3724-175	AEPB-37	ANSS-37
M10	AENP-M10	AEHD-M10	AESH-M10-175	AEPB-M10	ANSS-M10

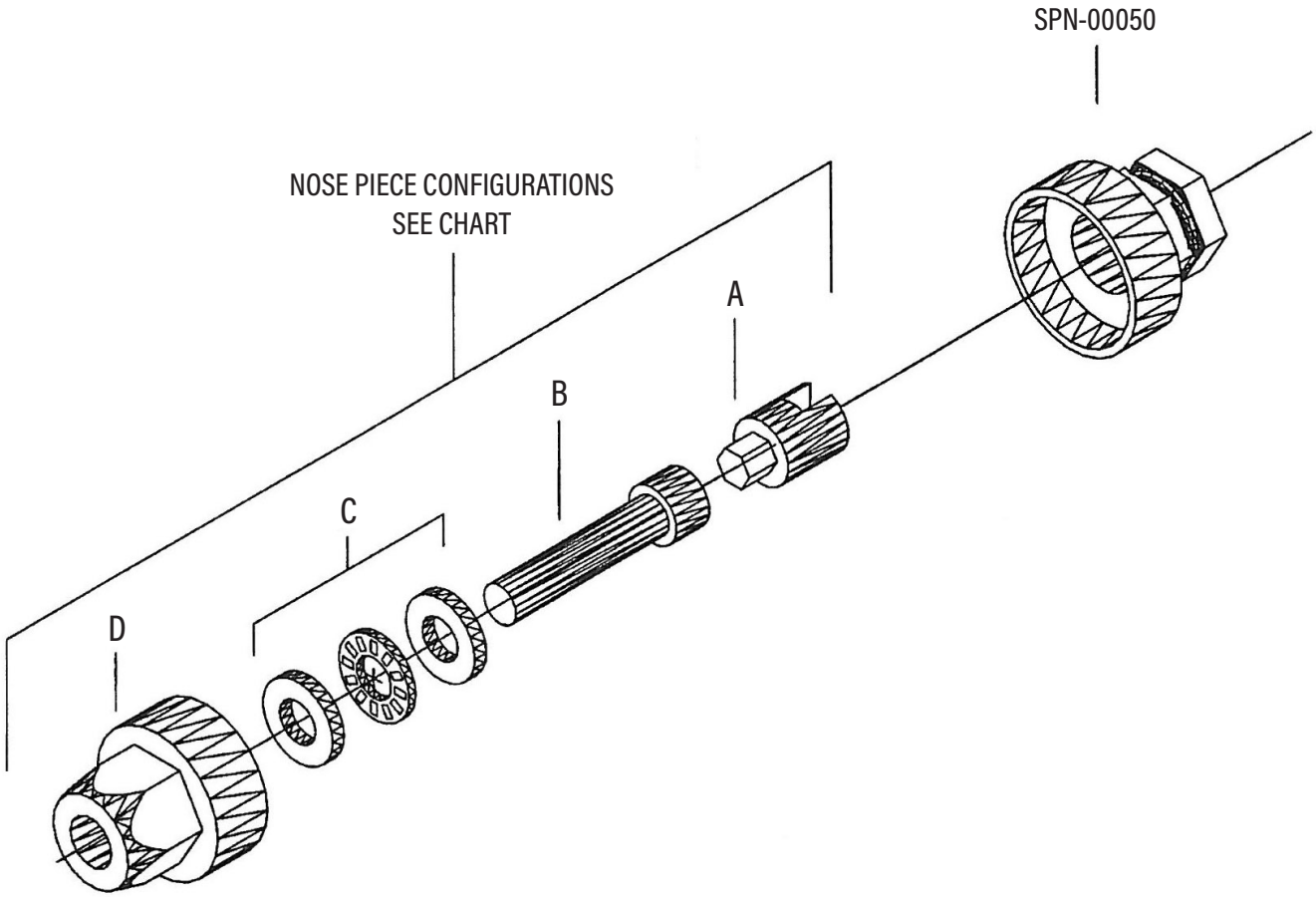

PNEUMATIC INSTALLATION
TOOL NOSE ASSEMBLY
½, 12MM

Thread Size	Complete Nose Piece Assembly	A	B	C	D
1/2-13	AENP-5013	AEHD-50	AESH-5013-225	AEPB-50	ANSS-50
1/2-20	AENP-5020	AEHD-50	AESH-5020-225	AEPB-50	ANSS-50
M12	AENP-M12	AEHD-M12	AESH-M12-175	AEPB-M12	ANSS-M12

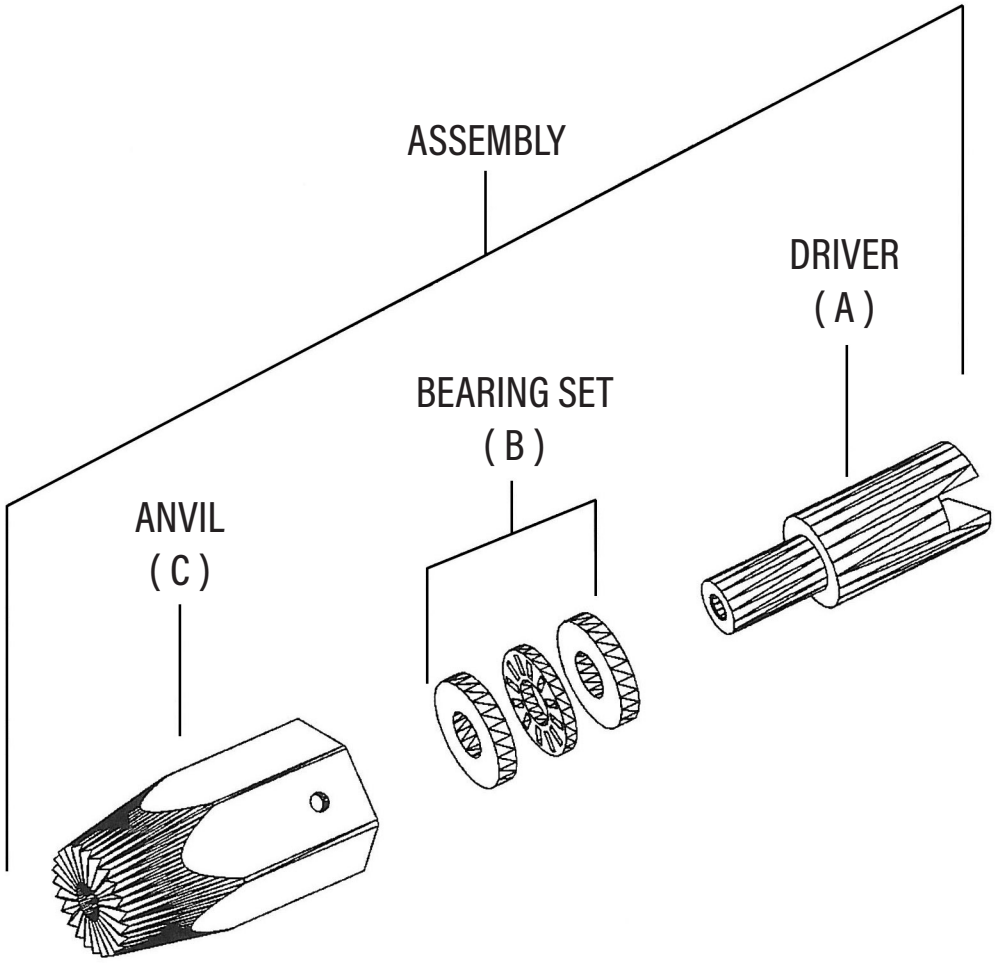

Assembly	A	B	C
AESNP-632	AESD-632	AEPB-31	AESA-6
AESNP-832	AESD-832	AEPB-31	AESA-8
AESNP-1024	AESD-1024	AEPB-37	AESA-10
AESNP-1032	AESD-1032	AEPB-37	AESA-10
AESNP-2520	AESD-2520	AEPB-37	AESA-25
AESNP-3118	AESD-3118	AEPB-100	AESA-37
AESNP-3716	AESD-3716	AEPB-100	AESA-37
AESNP-M4	AESD-M4	AEPB-31	AESA-8
AESNP-M5	AESD-M5	AEPB-37	AESA-10
AESNP-M6	AESD-M6	AEPB-37	AESA-25
AESNP-M8	AESD-M8	AEPB-100	AESA-37
AESNP-M10	AESD-M10	AEPB-100	AESA-37

	Thread Size	Complete Tool Part No. Series 800	Complete Tool Part No. 901, 902 903 & 904	Tool RPM	Air Settings – Fastener Material – Steel & Brass: Dynamic Air Pressure Settings	Air Settings – Fastener Material – Aluminum: Dynamic Air Pressure Settings	Air Settings – Fastener Material – Monel: Dynamic Air Pressure Settings	Nose Assembly Components For Internally Threaded Nuts: Part No. For Complete Nose Assembly	Nose Assembly Components For Internally Threaded Nuts: Mandrel Socket Head Cap Screw	Nose Assembly Components For Internally Threaded Nuts: Bearing Set (P/N)	Stud Series Part No. For Nose Assembly
PSI	#4-40	AE801-440	AE901-440	3000	35 - 45	30 - 40	35 - 45	AENP-440	440 x 1.50"	AEPB-4	AESNP-440
PSI	#6-32	AE801-632	AE901-632	3000	70 - 80	60 - 80	70 - 80	AENP-632	632 x 1.50"	AEPB-6	AESNP-632
PSI	#8-32	AE801-832	AE901-832	3000	70 - 90	50 - 70	70 - 90	AENP-832	832 x 1.50"	AEPB-8	AESNP-832
PSI	#10-24	AE802-1024	AE902-1024	1500	60 - 90	40 - 70	60 - 90	AENP-1024	1024 x 1.75"	AEPB-10	AESNP-1024
PSI	#10-32	AE802-1032	AE902-1032	1500	60 - 90	40 - 70	60 - 90	AENP-1032	1032 x 1.75"	AEPB-10	AESNP-1032
PSI	1/4-20	AE803-2520	AE903-2520	600	70 - 90	60 - 80	70 - 95	AENP-2520	420 x 1.50"	AEPB-25	AESNP-2520
PSI	1/4-28	AE803-2528	AE903-2528	600	70 - 90	60 - 80	70 - 95	AENP-2528	428 x 1.50"	AEPB-25	AESNP-2528
PSI	5/16-18	AE804-3118	AE904-3118	400	70 - 110	60 - 90	70 - 110	AENP-3118	518 x 2.00"	AEPB-31	AESNP-3118
PSI	5/16-24	AE804-3124	AE904-3124	400	70 - 110	60 - 90	70 - 110	AENP-3124	524 x 2.00"	AEPB-31	AESNP-3124
PSI	3/8-16	AE804-3716	AE904-3716	400	70 - 110	60 - 90	70 - 110	AENP-3716	616 x 2.00"	AEPB-37	AESNP-3716
PSI	3/8-24	AE804-3724	AE904-3724	400	70 - 110	60 - 90	70 - 110	AENP-3724	624 x 2.00"	AEPB-37	AESNP-3724
PSI	1/2-13	AE808-5013	—	275	75 - 120	60 - 90	75 - 110	AENP-5013	813 x 2.50"	AEPB-50	AESNP-5013
PSI	1/2-20	AE808-5020	—	275	75 - 120	60 - 90	75 - 110	AENP-5020	820 x 2.50"	AEPB-50	AESNP-5020
BARS	M3	AE801-M3	AE901-M3	3000	2.4 - 3.1	2.1 - 2.7	2.4 - 3.1	AENP-M3	M3 x 40mm	AEPB-M3	AESNP-M3
BARS	M4	AE801-M4	AE901-M4	3000	2.4 - 3.1	3.4 - 4.8	4.8 - 6.2	AENP-M4	M4 x 40mm	AEPB-M4	AESNP-M4
BARS	M5	AE802-M5	AE902-M5	1500	4.8 - 5.5	2.7 - 4.8	4.1 - 6.2	AENP-M5	M5 x 45mm	AEPB-M5	AESNP-M5
BARS	M6	AE803-M6	AE903-M6	600	4.1 - 5.5	4.1 - 5.5	4.8 - 6.5	AENP-M6	M6 x 40mm	AEPB-M6	AESNP-M6
BARS	M8	AE804-M8	AE904-M8	400	4.8 - 6.2	4.1 - 6.2	4.8 - 7.5	AENP-M8	M8 x 50mm	AEPB-M8	AESNP-M8
BARS	M10	AE804-M10	AE904-M10	400	4.1 - 7.5	4.1 - 6.2	4.8 - 7.5	AENP-M10	M10 x 50mm	AEPB-M10	AESNP-M10
BARS	M12	AE808-M12	—	275	4.1 - 7.5	4.1 - 6.2	5.1 - 7.5	AENP-M12	M12 x 60mm	AEPB-M12	AESNP-M12

	Thread Size	Complete Tool Part No. 911, 912 & 913	Tool RPM	Air Settings – Fastener Material – Steel & Brass: Dynamic Air Pressure Settings	Air Settings – Fastener Material – Aluminum: Dynamic Air Pressure Settings	Air Settings – Fastener Material – Monel: Dynamic Air Pressure Settings	Nose Assembly Components For Internally Threaded Nuts: Part No. For Complete Nose Assembly	Nose Assembly Components For Internally Threaded Nuts: Mandrel Socket Head Cap Screw	Nose Assembly Components For Internally Threaded Nuts: Bearing Set (P/N)	Stud Series Part No. For Nose Assembly
PSI	#4-40	AE911-440	2200	35 - 45	30 - 40	35 - 45	AENP-440	440 x 1.50"	AEPB-4	AESNP-440
PSI	#6-32	AE911-632	2200	60 - 80	40 - 70	60 - 80	AENP-632	632 x 1.50"	AEPB-6	AESNP-632
PSI	#8-32	AE911-832	2200	60 - 90	40 - 70	60 - 90	AENP-832	832 x 1.50"	AEPB-8	AESNP-832
PSI	#10-24	AE911-1024	2200	60 - 90	40 - 70	60 - 90	AENP-1024	1024 x 1.75"	AEPB-10	AESNP-1024
PSI	#10-32	AE911-1032	2200	60 - 90	40 - 70	60 - 90	AENP-1032	1032 x 1.75"	AEPB-10	AESNP-1032
PSI	1/4-20	AE12-2520	1100	60 - 90	50 - 80	70 - 95	AENP-2520	420 x 1.50"	AEPB-25	AESNP-2520
PSI	1/4-28	AE912-2528	1100	70 - 90	50 - 80	70 - 95	AENP-2528	428 x 1.50"	AEPB-25	AESNP-2528
PSI	5/16-18	AE913-3118	400	70 - 110	60 - 90	70 - 110	AENP-3118	518 x 2.00"	AEPB-31	AESNP-3118
PSI	5/16-24	AE913-3124	400	70 - 110	60 - 90	70 - 110	AENP-3124	524 x 2.00"	AEPB-31	AESNP-3124
PSI	3/8-16	AE913-3716	400	70 - 110	60 - 90	70 - 110	AENP-3716	616 x 2.00"	AEPB-37	AESNP-3716
PSI	3/8-24	AE913-3724	400	70 - 110	60 - 90	70 - 110	AENP-3724	624 x 2.00"	AEPB-37	AESNP-3724
BARS	M3	AE911-M3	2200	2.4 - 3.1	2.1 - 2.7	2.4 - 3.1	AENP-M3	M3 x 40mm	AEPB-M3	AESNP-M3
BARS	M4	AE911-M4	2200	2.4 - 3.1	2.7 - 4.8	4.1 - 6.2	AENP-M4	M4 x 40mm	AEPB-M4	AESNP-M4
BARS	M5	AE911-M5	2200	4.1 - 5.5	2.7 - 4.8	4.1 - 6.2	AENP-M5	M5 x 45mm	AEPB-M5	AESNP-M5
BARS	M6	AE912-M6	1100	4.1 - 5.5	4.1 - 5.5	4.8 - 7.5	AENP-M6	M6 x 40mm	AEPB-M6	AESNP-M6
BARS	M8	AE913-M8	400	4.8 - 6.2	4.1 - 6.2	4.8 - 7.5	AENP-M8	M8 x 50mm	AEPB-M8	AESNP-M8
BARS	M10	AE913-M10	400	4.1 - 7.5	4.1 - 6.2	4.8 - 7.5	AENP-M10	M10 x 50mm	AEPB-M10	AESNP-M10

NOTE: The air supplied to the 800 and 900 series tools should be dry and free of contamination to prevent premature wear and tear of the internal components. We suggest use of a filter, pressure regulator, and oiler system to be located in close proximity to the tool. All available thread sizes may not be listed. Contact us for availability. Optional mandrel lengths are also available for all product families. The air settings reported are suggested guidelines. Adjustments may be necessary for your application.

PennEngineering®
ATLAS®
North America: Danboro, PA USA • E-mail: atlas@pemnet.com • Tel: +1-215-766-5987 • Fax: +1-215-766-5988 • 877-682-2505 (USA Only)
Europe: Galway, Ireland • E-mail: europe@pemnet.com • Tel: +353-91-751714 • Fax: +353-91-753541
Asia/Pacific: Singapore • E-mail: singapore@pemnet.com • Tel: +65-6-745-0660 • Fax: +65-6-745-2400
Shanghai, China • E-mail: china@pemnet.com • Tel: +86-21-5868-3688 • Fax: +86-21-5868-3988

Visit our PEMNET™ Resource Center at www.pemnet.com

©2018 Rev. 418